LOMBARDA ACCESSORI SERRAMENTI

Lasistas 54MI

TECHNICAL DETAILS

LASISTAS 54MI - MODULAR version		
PRODUCT DESCRIPTION	Turning louvers for 54 x 11 mm wooden-slats. **Embedded profile**	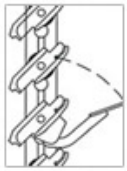
MATERIAL	- profile in zinc-coated steel and slat-holders in PBT - profile in aluminium and slat-holders in PBT	
TREATMENTS	Varnishing with polyester powder for outside.	
COLOURS	Standard Colours: ochre - brown - black. Available a vast range of colours (see our colour card).	
PROFILE DIMENSIONS	26 x 11 x 1 mm.	

LASISTAS 54MI assures:
- traditional shutter reproduction
- easy fitting by reverse-rotation accessory of slat-holders
- snap-shutting of slats
- stock decrease thanks to its "patented" modular version
- screws fastening: central
- quality of product checked on each piece by our inward supervision.

Section profile of the slat

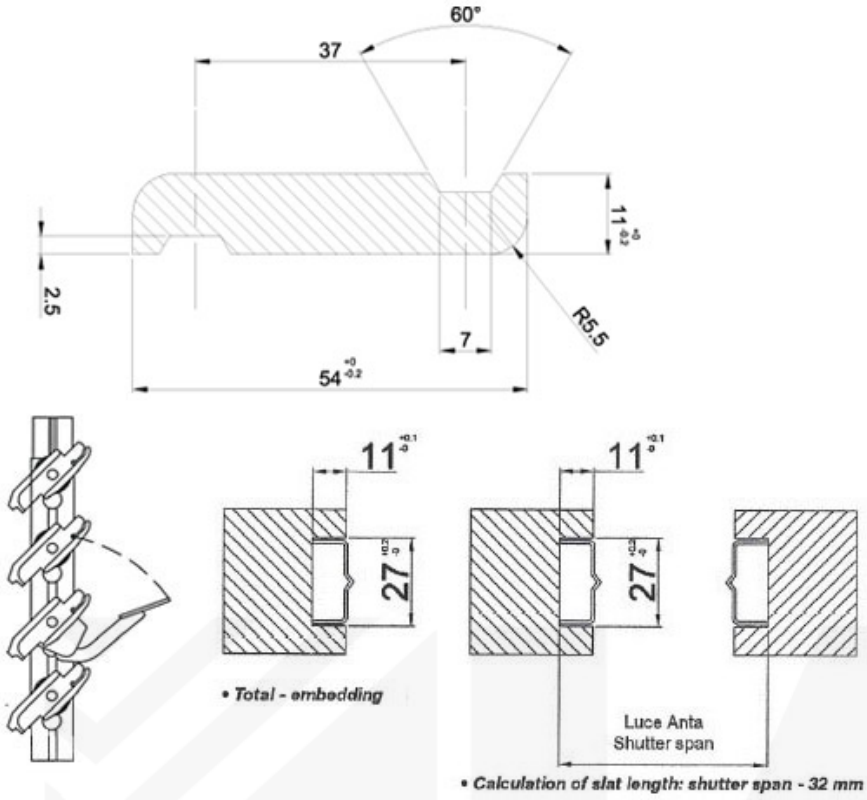

How to assemble the PBT slat

Slip in the previously treated slat: this should be done gently, as interference could cause stiffening of the closing mechanism.

Once the correct position is reached, the slat-holder will automatically block the slat in position.

Dimension LASISTAS 54MI - MODULAR version

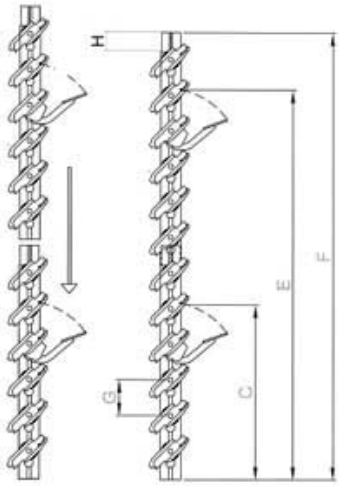

C - Height of first handle
E - Height of second handle
F - Height of frame
G - Centre distance (= 44,5mm)
H - Overlapping (= mm. 24)

SLATS controls		PROFILE 26 mm		
		C	E	F
6	1	227	-	292
7	1	227	-	336
8	1	227	-	381
9	1	227	-	425
10	1	227	-	470
11	1	227	-	514
12	1	227	-	559
13	1	227	-	603
14	1	405	-	648
15	1	405	-	692
16	1	405	-	737
17	1	405	-	781
18	1	405	-	826
19	1	405	-	870
20	1	405	-	915
21	1	405	-	959
22	1	405	-	1004
23 (11+12)	2	227	716	1049
24 (11+13)	2	227	716	1093
25 (12+13)	2	227	761	1138
26 (13+13)	2	227	805	1182
27 (13+14)	2	227	939	1227
28 (13+15)	2	227	983	1271
29 (14+15)	2	405	1028	1316
30 (14+16)	2	405	1028	1361
31 (15+16)	2	405	1072	1405
32 (15+17)	2	405	1072	1449
33 (16+17)	2	405	1117	1494
34 (16+18)	2	405	1117	1539
35 (17+18)	2	405	1161	1583
36 (17+19)	2	405	1161	1627
37 (18+19)	2	405	1206	1672
38 (18+20)	2	405	1206	1717
39 (18+21)	2	405	1206	1761
40 (19+21)	2	405	1250	1805
41 (20+21)	2	405	1295	1850
42 (20+22)	2	405	1295	1895
43 (21+22)	2	405	1339	1939
44 (22+22)	2	405	1384	1984

www.las-srl.it